STÖBICH®

SYSTEM: FIRE MULTI DETECTOR



Product description

The core of the solution for prevention – especially of large fires - is the reduction of the time between fire emergence and fire detection through the use of optical-thermal detectors in combination with the patented detection software.

This makes it possible to detect smoke, temperatures and natural flames with only one detector. Interference variables such as clouds, sun, fog, dust or heat-emitting vehicles do not lead to false alarms. Thus, this solution is perfectly suited for indoor and outdoor use, especially for large surveillance areas.

The 24/7 availability ensures great security in combination with the intelligent information processing and that all necessary agencies are immediately informed, alerted and provided with important additional information.

With this solution, large fires with all their drastic consequences for people, operations and the environment are a thing of the past.

Main features	Monitoring of indoor, outdoor and dynamic areas (conveyor belts)	Day and time-dependent detection parameters possible
	Colour and intensity-based flame and smoke detection smoke detection analyses lead to a high detection detection rate and minimised false alarms.	Secure transmission of alarms with live still image into the SMC app enables visual review of incidents and improved situational awareness in real time.
	The Fire Multi Detector has a built-in thermopile module that analyses temperatures in the detection area.	Internal recording enables events to be reviewed and analysed.
	Integrated evaluation unit	

Product features

Technical data	FMD 10	FMD 35
Dimensions L x W x H	14 11/16 x 10 3/8 x 3 15/16 in	
Operating voltage	12–24 V DC (PoE possible)	
Power	4,5 W	
Protection class	IP66	
Operating temperature	Operation: -4°F to 122°F Storage: 14°F to 158°F	
Humidity during operation	20 % to 80 % relative humidity (non-condensing)	
Weight	6.6 lb	
Approvals	CE marking, complies with Part 15 of the FCC CFR47, RoHS compliant	
Distance	up to 1,181 1/8 in	up to 3,149 5/8 in
Detection range optical	H: 85° · V: 63°	H: 34° · V: 25°
Detection range thermal	H: 90°	H: 39°
Resolution thermal	H: 82 px · V: 62 px	
Temperature range	-22°F to 572°F	
Monitoring area	11 13/16 in Fire: 753 ft² 23 5/8 in Fire: 3,122 ft²	11 13/16 in Fire: 4,844 ft² 23 5/8 in Fire: 19,913 ft²
Detection	Flame, smoke and temperature detection	
Image sensor	1/4 inch CMOS with progressive scan	
Automatic gain control AGC	Automatic and manual	
WDR image enhancement	>80 dB	
Signal-to-noise ratio	>50 dB	
Minimum lighting	20 lx (lux) IR floodlight, required for smoke detection. Fire detection and temperature monitoring are fully functional in complete darkness.	
Storage capacity	Integrated recording on internal SD card (up to 64 GB)	
Available archiving formats	JPEG and MPEG-4	
Alarms and relays	4 potential-free relay outputs Relay 1-3: 600 mA at 60 V DC Relay 4: 2.2 A at 60 V DC	

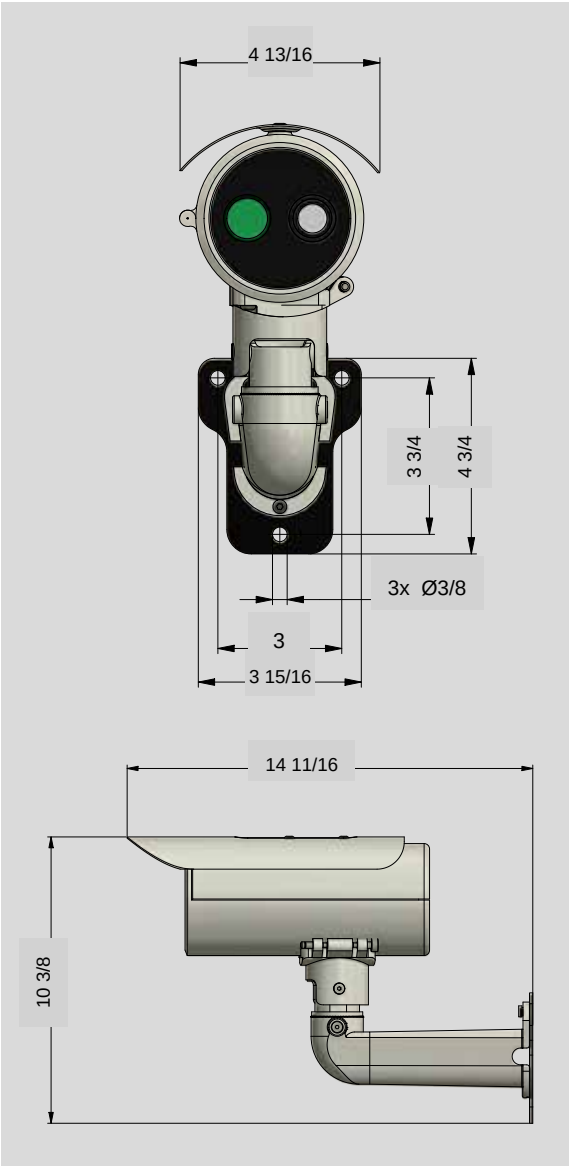

Options

- Central visualisation of the detector recordings
- Extended pollution protection
- Targeted deletion
- Connection to existing fire protection systems